ISSUE: April 2019

Chipset Makes Flybacks More Efficient In Powering Displays

Power Integrations' InnoMux chipset improves the performance of multi-output flyback converters in display power supplies. The chipset's unique single-stage power architecture reduces losses in display applications by increasing overall efficiency in constant-voltage and constant-current LED backlight driver stages by 50% compared to conventional solutions and achieving up to 91% efficiency, according to the company. Additionally, TV and monitor designers can realize over 50% reduction in component count, reducing manufacturing cost and providing an associated improvement in board reliability.

The new chipset consists of an InnoMux controller IC partnered with an InnoSwitch3-MX isolated switcher IC (Fig 1). The InnoSwitch3-MX is the latest addition to Power Integrations' flyback switcher IC families, combining the primary FET, the primary-side controller, a secondary-side controller for synchronous rectification, and FluxLink high-speed communications technology, which eliminates the need for an optocoupler.

The InnoSwitch3-MX receives control information from the InnoMux IC, which independently measures the load requirements of each output and directs the InnoSwitch3-MX switcher to deliver the right amount of power to each of the outputs to maintain accurate regulation of current or voltage. This eliminates the load and cross-regulation challenges seen with conventional multi-output power supplies, making post-regulators unnecessary. Overall power conversion efficiency increases by 10%, removing the need for heatsinks and eliminating hotspots while easing compliance with the upcoming ENERGY STAR 8.0 display specification and the new CEC power-consumption standard scheduled to take effect in July 2019.

InnoMux technology is said to uniquely support both accurately regulated constant-current and constant-voltage outputs simultaneously, supplying one to four channels of constant-current and up to two constant-voltage outputs (see Figs. 2 and 3). This flexibility supports the logic, audio and LED requirements typically seen in TV and monitor displays. The IC provides overload protection for each output. InnoMux technology also supports sophisticated dimming on the LED CC output—analog, PWM, interleaved and hybrid dimming are controlled via dedicated analog and PWM control pins, allowing accurate dimming down to 1.5%.

Comments Edward Ong, product marketing manager at Power Integrations, "Developers can leverage InnoMux's power conversion efficiency in two ways: they can develop highly efficient monitors and TVs to meet manufacturer targets and regional regulatory mandates, or they can downgrade the efficacy, and therefore the cost, of their display panel by using less expensive LEDs and simpler, cheaper, diffusers while still meeting upcoming ENERGY STAR 8.0 rules."

Two reference designs, DER-635 and DER-636, are available. The DER-636 describes a 40-W power supply monitor power supply with one constant-voltage output and four constant-current outputs. The DER-635 is a 45-W supply that supports TV applications, providing two CV outputs and one CC output. Samples will be available in the second quarter of 2019 via the Power Integrations website.

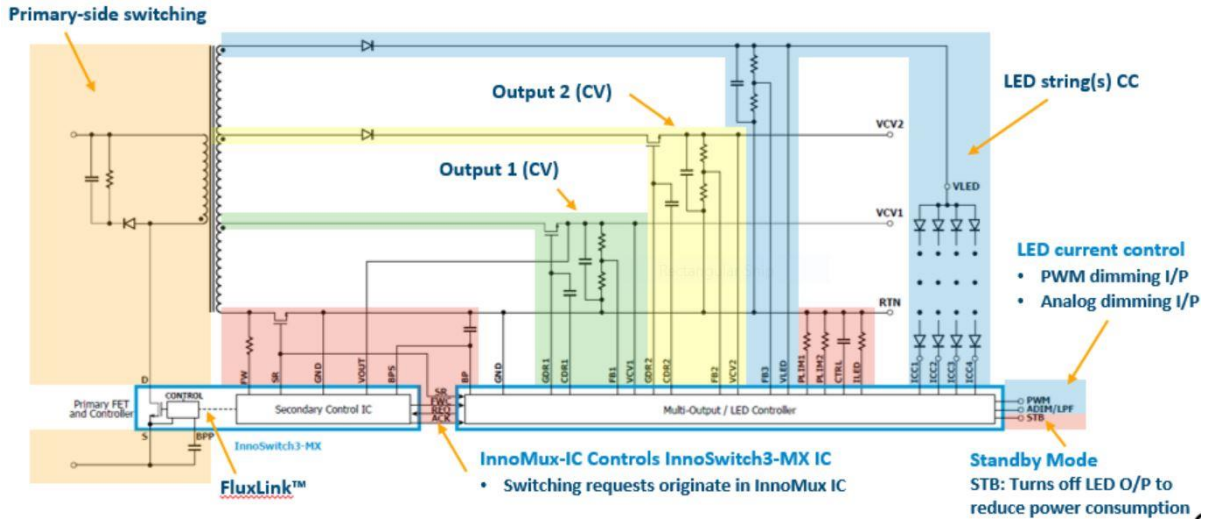

Fig. 1. InnoSwitch3-MX and InnoMux ICs power supply architecture. This 91%-efficient single-stage architecture provides independently regulated multiple CV and CC outputs.

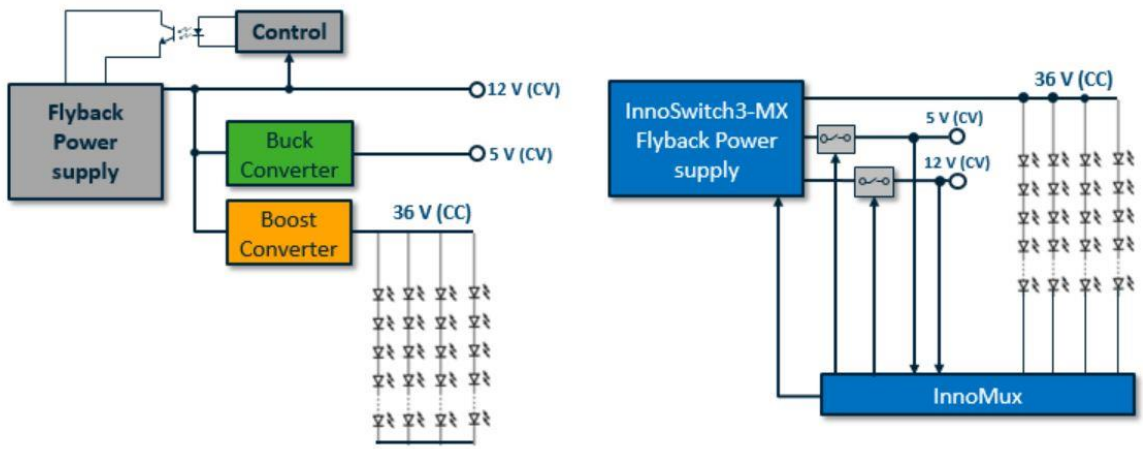

Fig. 2. The InnoMux chipset monitors all outputs and steers energy only to the output requiring energy. In a conventional two-stage display with CV and CC outputs—only one output is controlled and post regulators are required on the others (left). InnoSwitch3-MX Plus InnoMux single-stage conversion provides individual control of both CV and CC outputs (right).

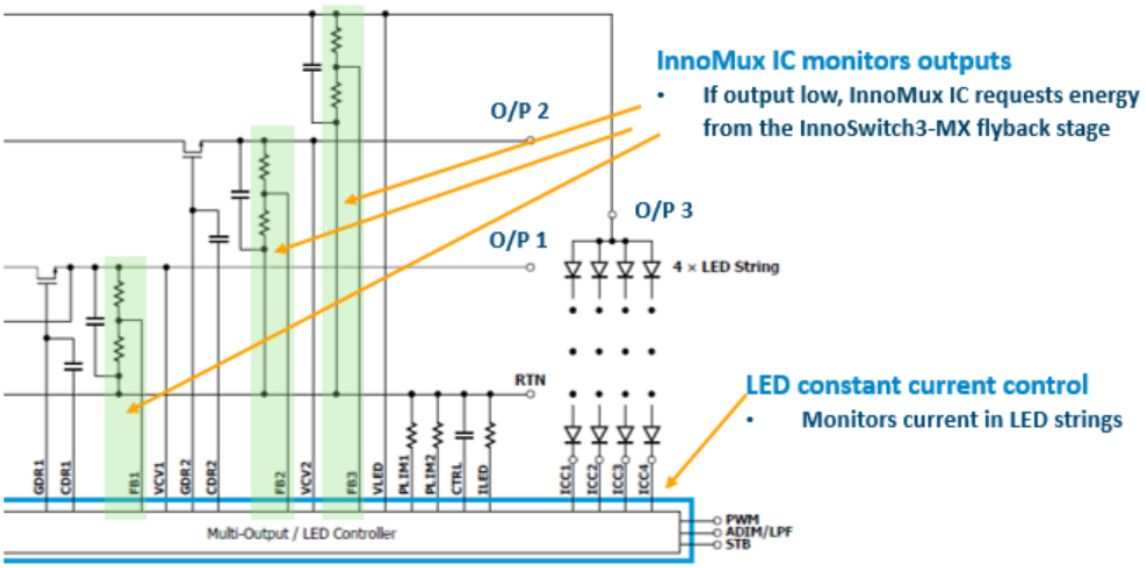

(a)

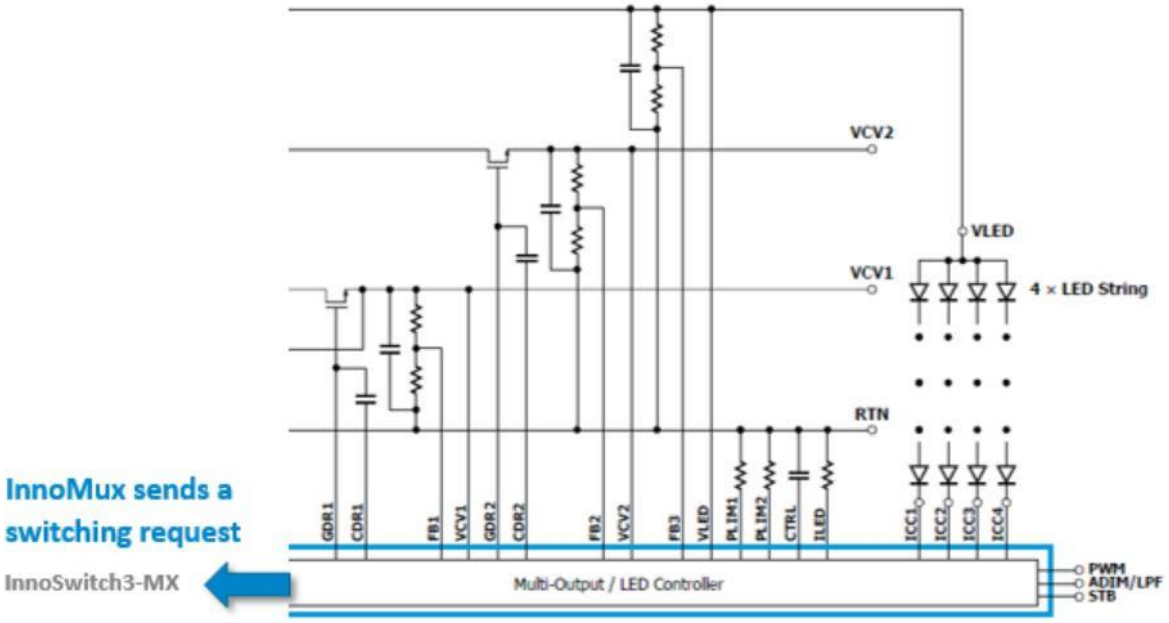

(b)

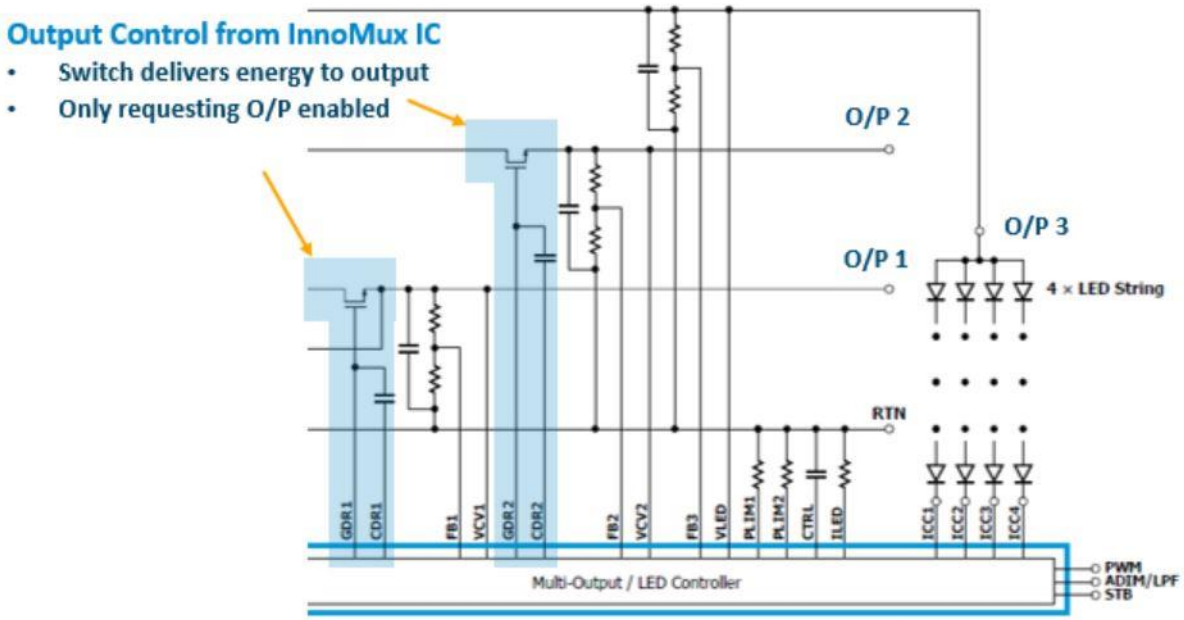

(c)

Fig. 3. In this architecture, any output can request a power pulse— triggered by the monitored voltage dropping below its limit (a). The InnoMux IC instructs InnoSwitch3-MX to perform a switching cycle and deliver a packet of energy (b). The requesting output takes all the power delivered (c).